Razor®

Pocket Mod™

MINIATURE ELECTRIC EURO-STYLE SCOOTER

OWNER'S MANUAL

Read and understand this entire manual before allowing child to use this product! For assistance contact Razor. DO NOT RETURN TO STORE.

NOTE: Manual illustrations are for demonstration purposes only. Illustrations may not reflect exact appearance of actual product. Specifications subject to change without notice.

Please have your product along with the 19 character product I.D. code with you before contacting Razor for warranty assistance and/or replacement parts.
Product I.D. Code: _____ - _____ - _____

CONTENTS

Safety Warnings....1-2
Before You Begin....3
Assembly and Set-Up....4-6
Charging the Battery/Pre-Ride Checklist....7
Usage....8
Repair and Maintenance....8-11
Troubleshooting Guide....12
Pocket Mod Parts....13
Warranty and Contact Information....15

SAFETY WARNINGS

⚠ WARNING: Riding a Pocket Mod does present potential risks and caution is required. Like any riding product, the Pocket Mod has inherent hazards associated with its use (for example, falling off or riding it into a hazardous situation). Like any riding product, the Pocket Mod can and is intended to move and it is therefore, of course, possible to lose control or otherwise get into dangerous situations. Both children and adults responsible for supervising them must recognize that if such things occur, a rider can be seriously injured or die, even when using safety equipment and other precautions. RIDE AT YOUR OWN RISK AND USE COMMON SENSE.

⚠ WARNING: PARENTAL AND ADULT RESPONSIBILITY AND SUPERVISION IS NECESSARY: Because products, like the Pocket Mod, can and do present potential hazards plainly associated with their use, it is well recognized THE NEED FOR EXERCISE OF PARENTAL RESPONSIBILITY IN SELECTING RIDING PRODUCTS APPROPRIATE TO THE AGE OF A CHILD, OR PARENTAL SUPERVISION IN SITUATIONS IN WHICH CHILDREN OF VARIOUS AGES MAY HAVE ACCESS TO THE SAME RIDING PRODUCTS, IS IMPORTANT. Not every product is appropriate for every age or size of child, and different age recommendations are found within this category of product which are intended to reflect the nature of the hazards and the expected mental or physical ability, or both, of a child to cope with the hazards.

The recommended minimum rider age is 13 and older. Any rider unable to fit comfortably on the Pocket Mod should not attempt to ride it. A parent's decision to allow his or her child to ride this product should be based on the child's maturity, skill and ability to follow rules.

Keep this product away from small children and remember that it is intended for use only by persons who are, at a minimum, completely comfortable and competent while operating the Pocket Mod.

Persons with any mental or physical conditions that may make them susceptible to injury, impair their physical dexterity or mental capabilities to recognize, understand, and follow safety instructions and to be able to understand the hazards inherent in Pocket Mod use, should not use or be permitted to use products inappropriate for their abilities. Persons with heart conditions, head, back or neck ailments (or prior surgeries to these areas of the body), or pregnant women, should be cautioned not to operate such products.

DO NOT EXCEED THE WEIGHT LIMIT OF 170 lb (77 kg). Rider weight does not necessarily mean a person's size is appropriate to fit or maintain control of the Pocket Mod.

CHECK AND MAINTAIN PRODUCT CONDITIONS
Before use, check to confirm that any and all chain guards or other covers and guards are in place and in serviceable condition. Check that the brake is functioning properly, and that tires are inflated properly and have sufficient tread remaining. The Pocket Mod should be maintained and repaired in accordance with the manufacturer's specifications, using only the manufacturer's authorized replacement parts, and should not be modified from the manufacturer's original design and configuration.

ACCEPTABLE RIDING PRACTICES AND CONDITIONS
Always check and obey any local laws or regulations, which may affect the locations where the Pocket Mod may be used. Keep safely away from cars and motor vehicle traffic at all times, and only use where allowed and with caution.

Do not activate the speed control on the hand grip unless you are on the Pocket Mod and in a safe, outdoor environment suitable for riding.

The normal powered top speed of the Pocket Mod will be approximately 15 mph (24 km/h), which can be affected by conditions, such as rider weight, inclines, tire inflation and battery charge level. Avoid excessive speeds that can be associated with downhill rides.

Maintain a hold on the handlebars at all times. Do not touch the brake or motor on your Pocket Mod when in use or immediately after riding as these parts can become very hot.

Ride defensively. Watch out for potential obstacles that could catch your wheel or force you to swerve suddenly or lose control. Be careful to avoid pedestrians, skaters, skateboards, scooters, bikes, children or animals who may enter your path, and respect the rights and property of others.

The Pocket Mod is intended for use on flat, dry surfaces, such as pavement or level ground, without loose debris, such as sand, leaves, rocks or gravel. Wet, slick, bumpy, uneven or rough surfaces may impair traction and contribute to possible accidents. Do not ride your Pocket Mod in mud, ice, puddles or water. Avoid sharp bumps, drainage grates, and sudden surface changes.

Do not attempt or do stunts or tricks on the Pocket Mod. The Pocket Mod is not made to withstand abuse from misuse, such as jumping, curb grinding or any other type of stunts. Racing, stunt riding, or other maneuvers also enhance risk of loss of control, or may cause uncontrolled rider actions or reactions.

Never allow more than one person at a time to ride the Pocket Mod.

Do not ride at night or when visibility is limited.

Never use near steps or swimming pools.

Do not allow hands, feet, hair, body parts, clothing, or similar articles to come in contact with moving parts, wheels, or drivetrain, chain while the motor is running.

Never use headphones, a cell phone or text when riding.

Never hitch a ride with a vehicle.

Do not ride your Pocket Mod in wet or icy weather and never immerse the Pocket Mod in water, as the electrical and drive components could be damaged by water or create other possibly unsafe conditions. Never risk damaging surfaces, such as carpet or flooring, by use of the Pocket Mod indoors.

Need Help? Visit our website for replacement parts, product support, a list of authorized service centers in the US and customer service contact information at **www.razor.com**. Please have the product I.D. code (located on the white label of your product) available for better assistance. Additional Customer Service contact information is listed at the back of this manual.

SAFETY WARNINGS

PROPER RIDING ATTIRE

Always wear proper protective equipment, such as an approved safety helmet (with chin strap securely buckled), elbow pads and kneepads. A helmet may be legally required by local law or regulation in your area. A long-sleeved shirt, long pants, and gloves are recommended. Always wear athletic shoes (lace-up shoes with rubber soles) and keep shoelaces tied and out of the way of the wheels, motor and drive system. Never ride barefooted or in sandals.

USING THE CHARGER

The charger supplied with the Pocket Mod should be regularly examined for damage to the cord, plug, enclosure and other parts. In the event of such damage, the Pocket Mod must not be charged until the charger has been repaired or replaced.

Use only with the recommended charger.

Use caution when charging.

The charger is not a toy. Charger should be operated by an adult.

Do not operate charger near flammable materials.

Unplug charger and disconnect from Pocket Mod when not in use.

Always disconnect from the charger prior to wiping down and cleaning your Pocket Mod with damp cloth.

FAILURE TO USE COMMON SENSE AND HEED THE WARNINGS INCREASES RISK OF SERIOUS INJURY. USE WITH APPROPRIATE CAUTION AND SERIOUS ATTENTION TO SAFE OPERATION.

BEFORE YOU BEGIN

Remove contents from box. Remove the separators that protect the components from damage during shipping. Inspect the contents of the box for scratches in the paint, dents or kinked cables that may have occurred during shipping. Because the Pocket Mod is 95 percent assembled and packed at the factory, there should not be any problems, even if the box has a few scars or dents.

MAKE SURE POWER SWITCH IS TURNED "OFF" BEFORE CONDUCTING ANY MAINTENANCE PROCEDURES.

❑ Estimated Assembly and Set-Up Time

Razor recommends assembly by an adult.
Allow up to 15 minutes for assembly.
Allow up to 12 hours for initial charge **(see page 7 for charging information)**.

Charger
Note: Charger design may vary from one shown

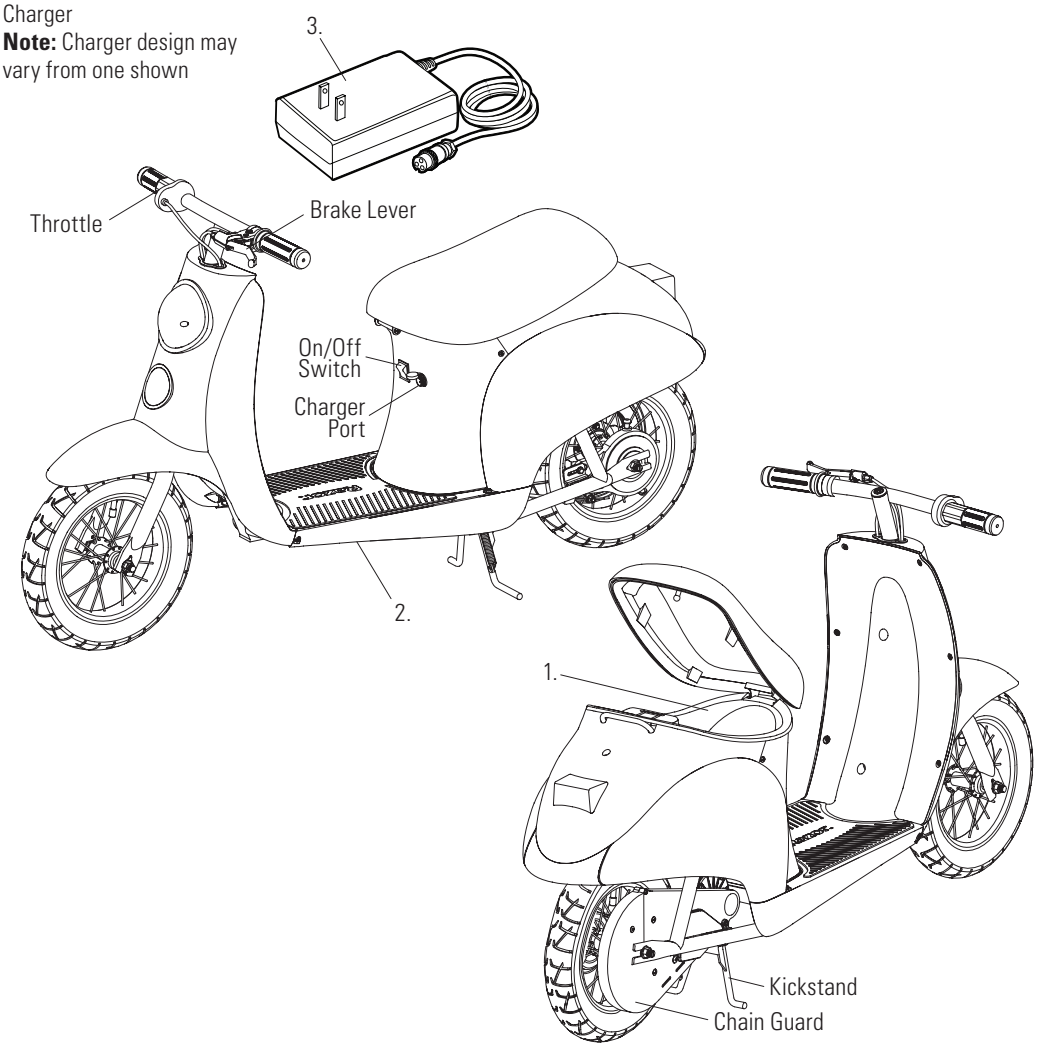

❑ Required Tools

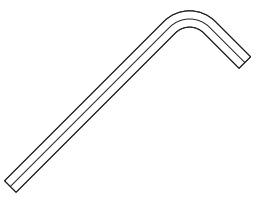

5 mm Allen Wrench and
6 mm Allen Wrench (included)

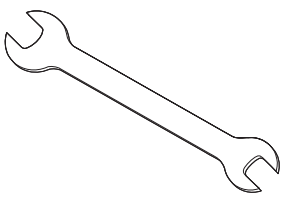

Two (2) 13 mm/15 mm
Wrenches (included)

⚠ WARNING: DO NOT USE NON-RAZOR PRODUCTS WITH YOUR RAZOR POCKET MOD. The Pocket Mod has been built to certain Razor design specifications. The original equipment supplied at the time of sale was selected on the basis of its compatibility with the frame, fork and all other parts. Certain aftermarket products may not be compatible and will void your warranty.

Product ID Locations:
(See locations to the left)

1. Inside Storage Compartment
2. Underneath Frame
3. Charger
4. UPC Side of Box (not shown)

Plastic Bag Contents:

- Charger
- Tools
- Owner's Manual

ASSEMBLY AND SET-UP

Turn power switch off before conducting any maintenance procedures.

❑ Attaching the Handlebars

Required Tool: 6 mm Allen Wrench (included)

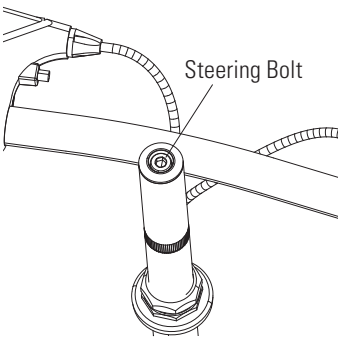

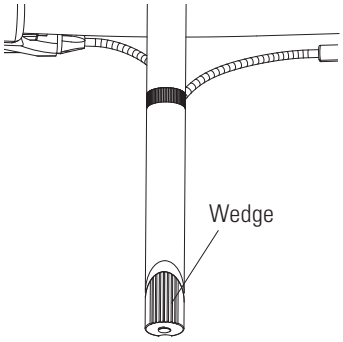

1 Using a 6 mm Allen wrench, loosen steering bolt in four (4) complete turns so that the wedge is loose and not touching steering tube.

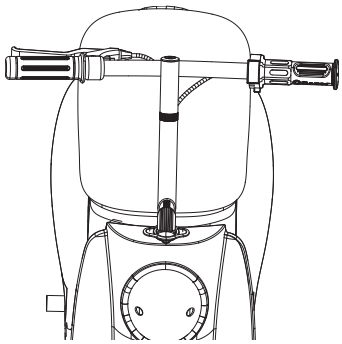

2 Facing the front of the Pocket Mod, position the handlebars so the throttle is on your right and the brake lever is on your left (the red "SAFE ZONE" print will be facing you). Align wedge inside handlebar tube.
Note: Plastic cover needs to be removed prior to installing the handlebars.

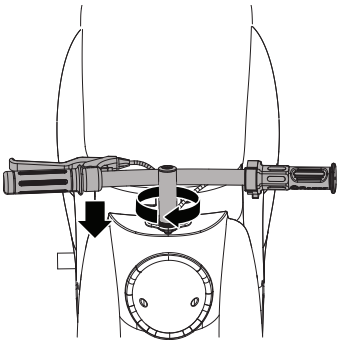

3a While inserting the steering tube down into the handlebar tube, hold steering bolt steady with thumb and rotate handlebars 180 degrees to the left.

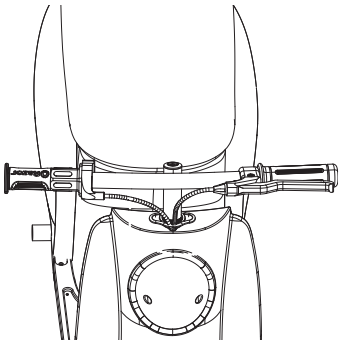

3b The throttle should now be on your left and the brake lever on your right.

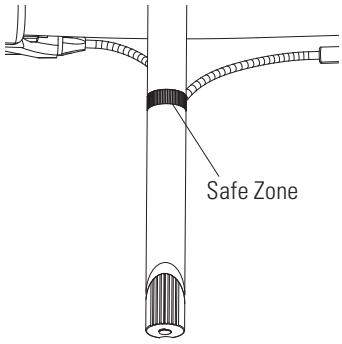

4 Slowly slide the handlebars up to make certain that the bar is in the "SAFE ZONE". Failure to secure the handlebars within the safe zone can cause the handlebars to come out while riding.

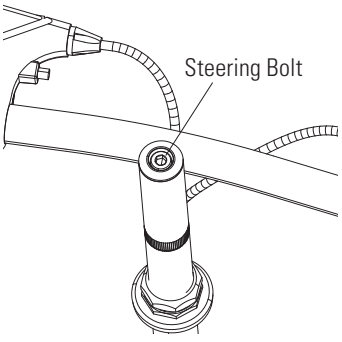

5 Securely tighten bolt using 6 mm Allen wrench.

Note: Make sure the brake cables/ wires are out of the way before inserting the handlebar into the fork.

⚠ **WARNING:** Periodically check to make sure the steering bolt is tightly fastened.

Note: Failure to secure the handlebars within the safe zone can cause the handlebars to come out while riding.

Need Help? Visit our website for replacement parts, product support, a list of authorized service centers in the US and customer service contact information at **www.razor.com**. Please have the product I.D. code (located on the white label of your product) available for better assistance. Additional Customer Service contact information is listed at the back of this manual.

❑ Positioning the Brake Lever

Required Tool: 5mm Allen Wrench (included)

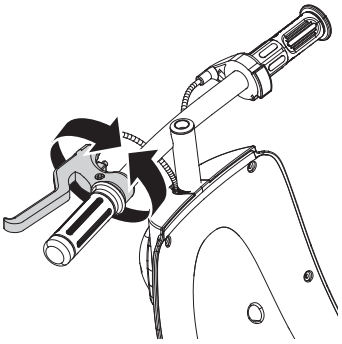

1 Adjust angle of the brake lever to a comfortable position for the rider by turning back and forth.

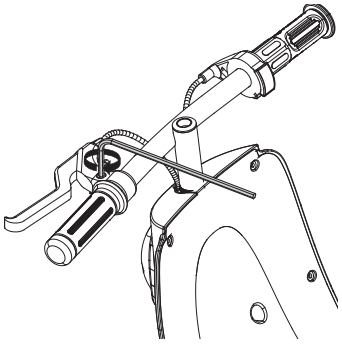

2 Securely tighten the bolt using a 5 mm Allen wrench.

❑ Attaching the Front Wheel

Required Tools: Two (2) 15 mm Wrenches (included)

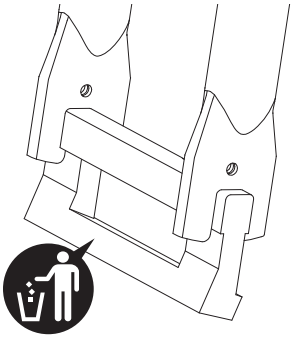

1 Remove the plastic packing material from the front fork. Discard the plastic packing material.

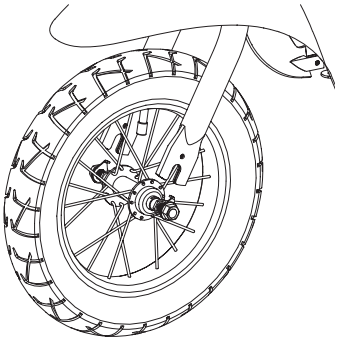

2 Insert the wheel into the front fork with the lock washers on the outside of the fork.

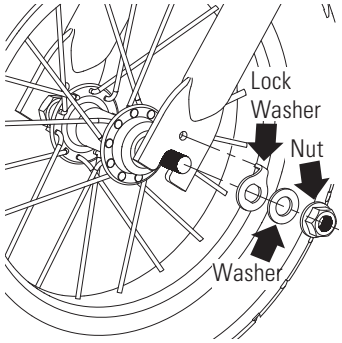

3 Insert the tab on the lock washer into the hole on the front fork and tighten the nuts using two 15 mm wrenches.

❑ Inflating the Tires

Tires are inflated when shipped, but they invariably may lose some pressure between the point of manufacturing and your purchase. **Always inflate the tires to the correct PSI before first time use.**

Lower air pressure can result in a shorter ride time.

Periodically check both tires. Reinflate when needed.

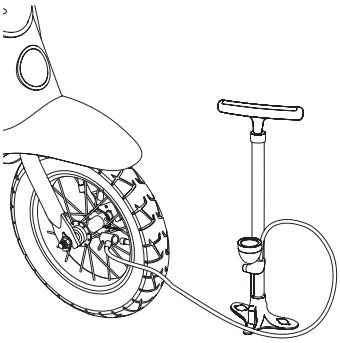

Using a bicycle tire pump equipped for a Schrader valve, inflate the tires to the PSI indicated on the sidewall of the tires.

⚠ WARNING:
Do not use the Pocket Mod for the first time until you have inflated the tires to the correct PSI. Failure to do so may damage your Pocket Mod and void your warranty.

⚠ WARNING:
Do not overinflate, as this could damage the tire or wheel.

Note: The pressure air supplies found at gasoline stations are designed to inflate high-volume automobile tires. If you decide to use such an air supply to inflate your Pocket Mod tires, first make sure the pressure gauge is working, then use very short bursts to inflate to the correct PSI. If you inadvertently overinflate the tires, release the excess pressure immediately.

CHARGING THE BATTERY

Your Pocket Mod may not have a fully charged battery; therefore it is a good idea to charge the battery prior to use.

- Initial charge time: 12 hours
- Recharge time: up to 12 hours, even if the light turns green. Recommended maximum charging time is 24 hours.
- Always charge the battery immediately after riding.
- Fully charge battery before storing for extended periods of time.
- Unplug charger from the wall outlet when not in use.
- Failure to recharge battery periodically may result in a battery that will not accept a charge.
- Make sure power switch is turned **OFF** when product is not in use. If the power switch is left on for an extended period of time, the battery may reach a stage at which it will no longer hold a charge.
- To ensure long battery life, never store the product in freezing or below freezing temperatures! Freezing will permanently damage the battery.
- Run time: Up to 40 minutes of continuous ride time. Run time may vary depending on riding conditions, climate and/or proper maintenance.
- Constant stopping and starting may shorten ride time.
- Battery life can vary depending on proper maintenance and usage of the product.

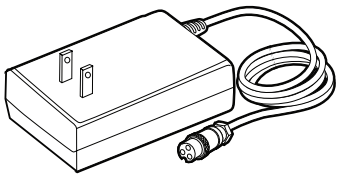

Charger
(Note: Charger design may vary from one shown)

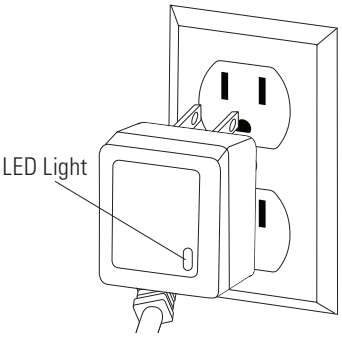

1 Plug the charger plug into wall outlet. The light on the charger should be green.

Note: If green light (LED) does not turn on, try a different outlet.

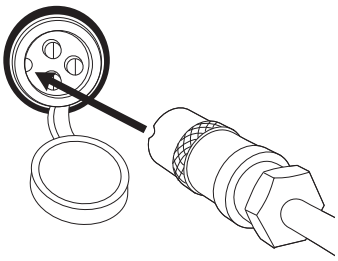

2 Make sure the power switch is in the **OFF** position. Plug the charger into the charger port on the product. The light on the charger should turn red during charging. The light will turn green when charging is complete.

⚠ **WARNING:** Use ONLY with the recommended charger. Batteries are only to be charged under adult supervision. The charger is not a toy. Always disconnect the charger before wiping down and/or cleaning the Pocket Mod with a damp cloth.

The charger supplied with the Pocket Mod should be regularly examined for damage to the cord, plug, enclosure and other parts. In the event of such damage, the Pocket Mod must not be charged until it has been repaired or replaced.

Chargers have built-in overcharge protection to prevent battery from being overcharged.

Note: If the charger gets warm during regular use, this is a normal response and is no cause for concern. If your charger does not get warm during use, it does not mean that it is not working properly.

Wall outlet - Green (stand by)

Wall outlet and unit - Red (charging)

Wall outlet and unit - Green (charged)

Note: Continue charging unit even if light turns green prior to 12 hours.

⚠ **WARNING:** Battery charge can deplete over time. Periodically recharge battery when not in use.

PRE-RIDE CHECKLIST

Brake
Check the brake for proper function. When you squeeze the brake lever, the brake should provide positive braking action. When you apply the brake with the speed control on, the brake cut-off switch will stop the motor.

Tires
Periodically inspect the tires for excess wear, and regularly check the tire pressure and reinflate as necessary. If you get a flat tire, the inner tube can be patched or a new tube can be purchased from Razor or an authorized service center.

Frame, Fork and Handlebars
Check for cracks or broken connections. Although broken frames are rare, it is possible for an aggressive rider to run into a curb or object and wreck, bend or break the frame. Get in the habit of inspecting your product on a regular basis.

Hardware/Loose Parts
Before every ride, check all parts, such as nuts, bolts, cables, fasteners, etc., to ensure they are secure and assembled correctly. There should not be any unusual rattles or sounds from loose parts or broken components. If the product is damaged, do not ride. **Reference "Safety Warnings" on pages 1 and 2 of this manual.**

Safety Gear
Always wear proper protective gear, such as an approved safety helmet. Elbow pads and kneepads are recommended. Always wear athletic shoes (lace-up shoes with rubber soles) and keep shoelaces tied and out of the way of the wheels, motor and drive system. NEVER RIDE BAREFOOTED OR IN SANDALS.

Laws and Regulations
Always check and obey any local laws or regulations.

Insurance
Do not assume that your existing insurance policies necessarily provide coverage for electric product use. Check with your insurance company for information regarding insurance.

Storage
Prolonged exposure to UV rays, rain and the elements may damage the enclosure materials, store indoors when not in use.

USAGE

❑ Starting the Pocket Mod

Once seated, place both hands on the handlebars. Slowly push forward with one foot and apply the throttle.

Note: Keep both feet on the base fairing when product is in motion.

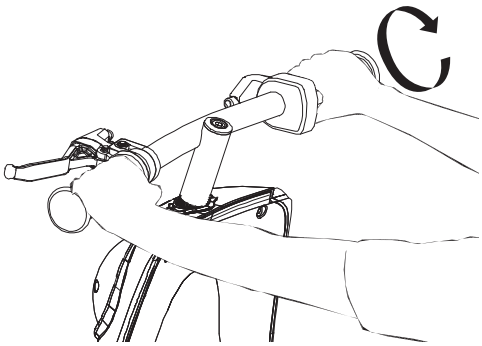

❑ Stopping the Pocket Mod

Release the throttle and apply the brake.

Note: When coming to a complete stop, place both feet on the ground to balance the product.

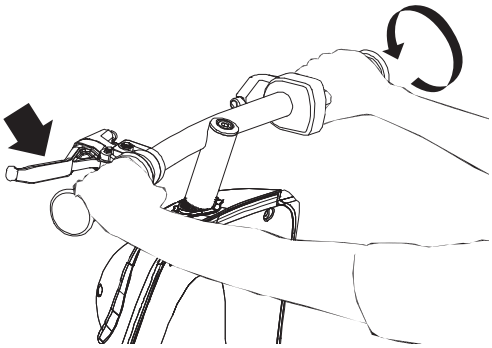

Note: As an additional safety feature, the Pocket Mod is designed to cut power to the motor when the hand brake is applied.

REPAIR AND MAINTENANCE

Turn power switch "OFF" before beginning repair or maintenance:

- Read the instructions
- Remove charger plug
- Turn the power switch off
- Secure the product under repair
- Exercise caution around exposed parts
- Contact Razor customer service if unsure about any repair or maintenance

❑ Testing the Brake

To use the brake, squeeze the brake lever to increase the pressure on the brake. The brake lever is fitted with a cable adjuster to compensate for cable stretch and/or to fine-tune the lever movement to brake engagement. If brake is not engaging properly, follow instructions for adjusting the brake.

⚠ WARNING: The brake is capable of skidding the tire and throwing an unsuspecting rider. Practice in an open area, free from obstacles, until you are familiar with the brake function. Avoid skidding to a stop as this can cause you to lose control or damage the rear tire.

Note: The brake lever contains a safety switch to cut power to the motor when the brake is applied. In an emergency, applying the brake will always stop the product from moving. Do not disable or replace this lever with anything other than a genuine Razor replacement part.

❑ Adjusting the Brake

Required Tool: 10 mm Wrench (not included)

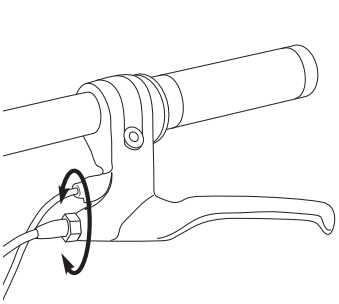

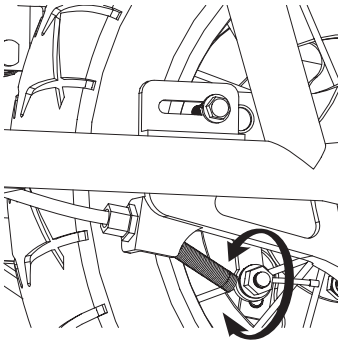

1 To adjust the tension, thread the brake lever adjuster on the hand brake in or out 1/4 to 1/2 turn until the desired brake adjustment is attained. Most adjustments are complete at this step. If brake still needs further adjustment, proceed to step 2.

2 If brake is too tight or has too much slack, use a 10 mm wrench to loosen the nut for additional adjustment on the brake cable on the rear wheel. Securely tighten nut when done.

Need Help? Visit our website for replacement parts, product support, a list of authorized service centers in the US and customer service contact information at **www.razor.com**. Please have the product I.D. code (located on the white label of your product) available for better assistance. Additional Customer Service contact information is listed at the back of this manual.

❑ Chain and Rear Wheel Replacement

Required Tools: Phillips Screwdriver, 10 mm Wrench, Two (2) 8 mm Wrenches, and Two (2) 15 mm Wrenches

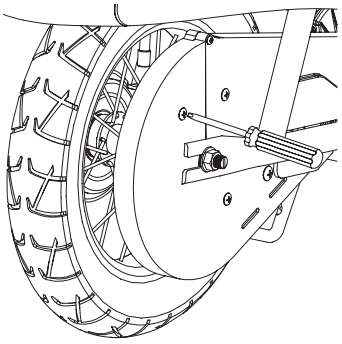

1 With a Phillips screwdriver, remove the five (5) screws that secure the chain guard. Remove chain guard.

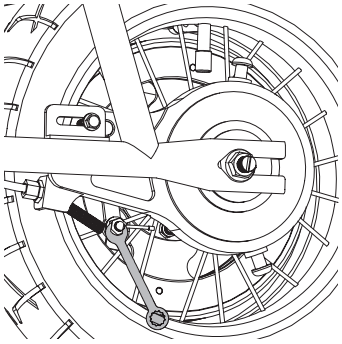

2 With a 10 mm wrench, loosen the brake cable anchor and disconnect the cable.

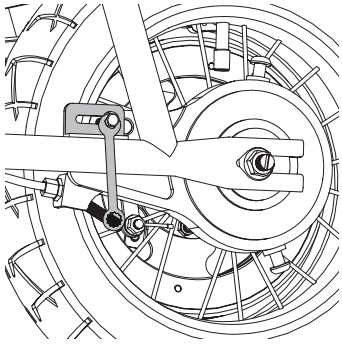

3 With two (2) 8 mm wrenches, loosen brake housing anchor and disconnect. Keep the spacer and washers together.

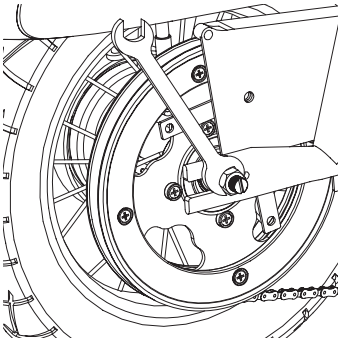

4 With two (2) 15 mm wrenches, loosen the axle. Slide the wheel forward to loosen the chain and remove the wheel. *See the hardware sequence on the right.

Note: Your hands will get greasy doing this.

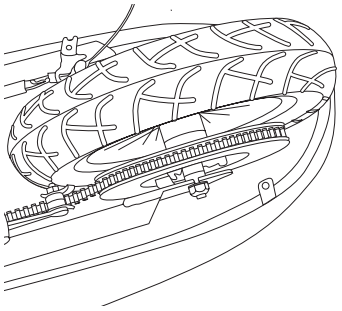

5 Install the new chain or wheel by slipping the chain around the axle. Slide the axle into the slots on the frame. Slide the wheel forward and maneuver the chain onto the rear sprocket, motor shaft and chain tensioner.

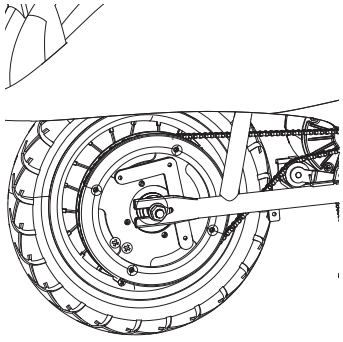

6 Verify chain is properly installed on each sprocket and tensioner is correctly positioned at the bottom of the chain.

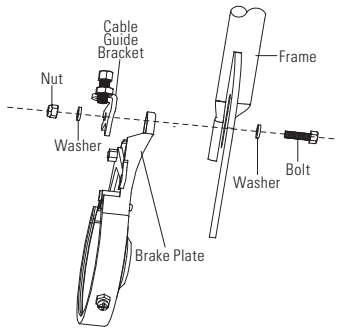

7 Install the cable guide bracket to the frame and brake plate using bolt, washers, and nut. Do not tighten. **See the hardware sequence on the right.

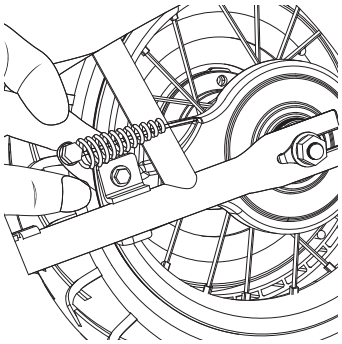

8 Thread the brake cable through the brake adjuster barrel, through the large spring, and into the small hole in the side of the anchor bolt. Position the cable to the original location (as indicated by the slight cable kink) and tighten securely.

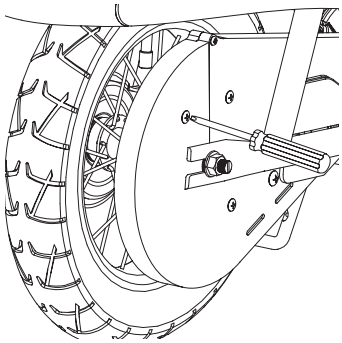

9 Reattach the chain guard. Test ride and readjust as needed.

*Note the hardware sequence (from outside toward the center).

Left Side (Brake)
15 mm Flange Locknut
Lock Washer

Frame
Washer (Plete Cut)
Brake Plate

Right Side (Throttle)
15 mm Flange Locknut
Lock Washer

Frame
Washer
Washer

**Note the hardware sequence (from left to right).

Nut
Washer
Cable Guide Bracket
Brake Plate

Frame
Washer
Bolt

❑ Front Wheel Replacement

Required Tools: Phillips Screwdriver and 15 mm Wrench

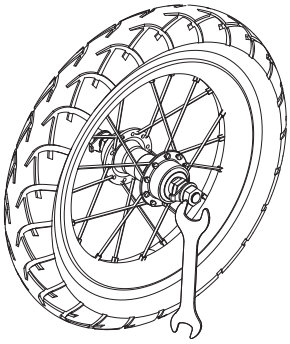

1 Remove the nuts on both sides of the front axle using a 15 mm wrench then remove the axle safety washers (note hardware sequence from step 3).

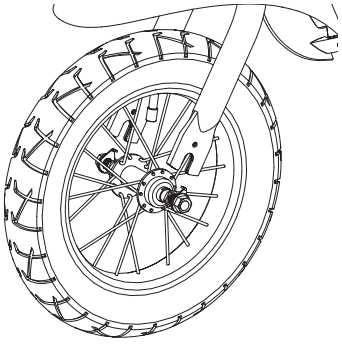

2 Insert the wheel into the front fork with the lock washers on the outside of the fork.

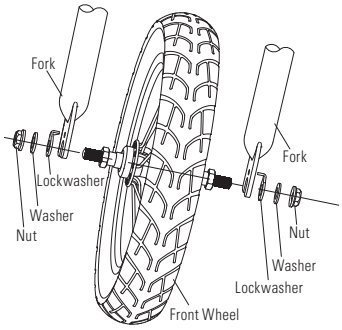

3 Insert the tab on the lock washer into the hole on the front fork and tighten the nuts using two (2) 15 mm wrenches.

❑ Replacing the Fuse

Required Tool: Phillips Screwdriver (not included)

Turn power switch OFF.

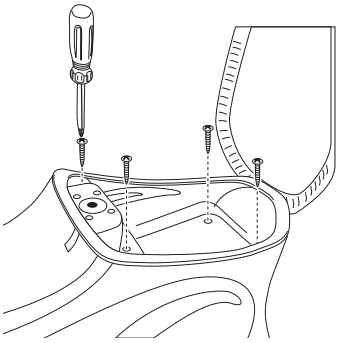

1 Lift up the seat and loosen the four (4) screws in the storage compartment and remove the tray.

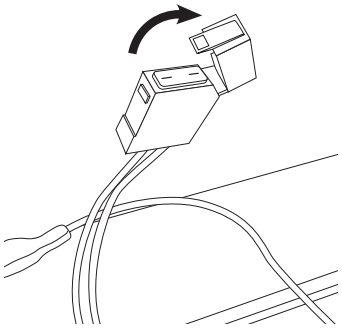

2 Locate fuse box on top of battery. Open the fuse cover to expose the fuse.

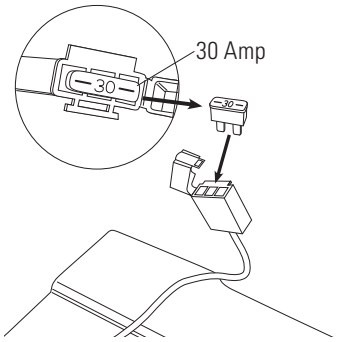

3 Remove the fuse and replace with a new one of equal amperage. Close the fuse box. Reattach seat/ storage compartment.

⚠ **WARNING:** To prevent shock, please follow the instructions accordingly and do not skip or combine any steps.

REPAIR AND MAINTENANCE

❑ Removing the Seat Cover for Cleaning (Select Models only)

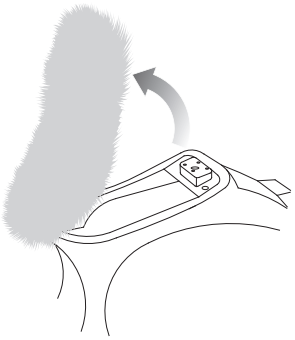

1 Lift seat.

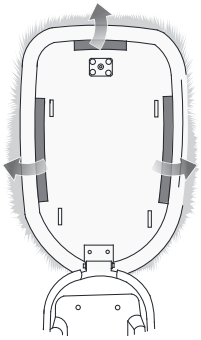

2 Detach cover from hook and loop fasteners.

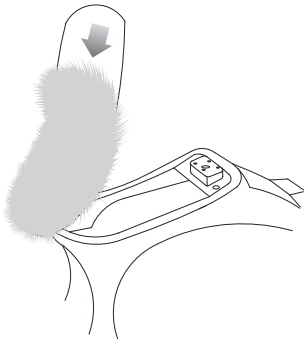

3 Remove seat cover. Reverse steps to replace seat cover after it is thouroughly dry.

Care Instructions

	Hand wash with like colors in cold water
	Non-Chlorine bleach when needed
	Dry flat
	Steam iron

❑ Battery Care and Disposal

Do not store in freezing or below freezing temperatures. To properly maintain your battery and ensure maximum battery life, carefully read the "Charging the Battery" section on page 7 of this owner's manual.

CONTAINS SEALED NON-SPILLABLE LEAD-ACID BATTERIES. BATTERIES MUST BE RECYCLED.

Disposal: Your Razor product uses sealed lead-acid batteries which must be recycled or disposed of in an environmentally safe manner. Do not dispose of a lead-acid battery in a fire. The battery may explode or leak. Do not dispose of a lead-acid battery in your regular household trash. The incineration, land filling or mixing of sealed lead-acid batteries with household trash is prohibited by law in most areas. Return exhausted batteries to a federal or state approved lead-acid battery recycler or a local seller of automotive batteries. If you live in Florida or Minnesota, it is prohibited by law to throw away lead-acid batteries in the municipal waste stream.

❑ Charger

The charger supplied with the product should be regularly examined for damage to the cord, plug, enclosure and other parts and in the event of such damage, the product must not be charged until it has been repaired or replaced.

Use ONLY with the recommended charger.

❑ Wheels

Wheels and drive system are subject to normal wear and tear. It is the responsibility of the user to periodically inspect wheels for excess wear and adjust and replace drive train components as required.

❑ Replacement Parts

The most frequently requested replacement parts are available for purchase at some Razor retail partners. For the complete selection of replacement parts visit www.razor.com.

❑ Repair Centers

For a list of authorized Razor repair centers:

- Check online at www.razor.com.
- Additional Customer Service contact information is listed on the back of this manual.

In the US and Canada only:
For more information regarding recycling of rechargeable batteries, call toll free 1-800-822-8837, or visit http://www.call2recycle.org

⚠ WARNING: If a battery leak develops, avoid contact with the leaking acid and place the damaged battery in a plastic bag. Refer to the disposal instructions at left. If acid comes into contact with skin or eyes, flush with cool water for at least 15 minutes and contact a physician.

⚠ WARNING: Battery posts, terminals and related accessories contain lead and lead compounds. **Wash your hands after handling**.

TROUBLESHOOTING

*Product(s) should be turned **OFF** and fully charged prior to doing any Troubleshooting.
NOTE: All troubleshooting steps should be performed by an adult only.

Problem	Possible Cause	Solution
Does not work out of the box	Loose connection(s)	Check for loose connections/wires
No longer works	Blown fuse	Replace if needed
	Loose connections	Check for loose connections/wires
	Charger not working	Check power to wall outlet and/or try a different outlet
		Check lights on charger: Plugged into wall = Green Plugged into wall & product (Charging) = Red Charging Complete = Green No lights - Replace Charger
	Battery will not hold a charge	With no weight on the product, lift up back end and apply the throttle. If motor engages - Replace Battery
		If motor does not engage, but makes a clicking sound - Replace Battery If motor does not engage, no clicking sound - Replace Control Module
Short ride time/Runs slow	Rider's weight	Do not exceed **170 lb (77 kg)** maximum weight limit
	Low tire pressure	Check tires for correct PSI
	Riding conditions	Use only on flat, dry surfaces. Avoid inclines and areas with heavy debris
	Battery not fully charged	Charge product for a full 12 hours
	Old/damaged battery	With no weight on the product, lift up back end and apply the throttle. If motor engages - Replace Battery
	Improper battery maintenance	Charge battery at least once a month when not in use
		Do not store product in freezing or below freezing temperatures. Freezing will permanently damage the battery and greatly reduce ride time
		Refer to Page 7 Charging the Battery
Runs intermittently	Loose connection(s)	Check the wires around the throttle and for other possible loose connections
		Contact your local Razor authorized service center for diagnosis and repair
		Replace - Throttle

For more troubleshooting tips, a list of available replacement parts or to locate an authorized Service Center in your area, visit our website at www.razor.com or call toll free +1 866 467 2967 to speak to a live Customer Service Representative.

Need Help? Visit our website for replacement parts, product support, a list of authorized service centers in the US and customer service contact information at **www.razor.com**. Please have the product I.D. code (located on the white label of your product) available for better assistance. Additional Customer Service contact information is listed at the back of this manual.

POCKET MOD PARTS

Keep your Pocket Mod running for years with genuine Razor parts. Visit our website or e-mail us for more information on spare part availability. (Specifications subject to change without notice.)

1. Handlebar Grip (Right/Left)
2. Single-Speed Twist-Grip Throttle
   2-1 Sleeve
3. Handlebar
4. 6 mm Stem Bolt w/Wedge
5. Brake Lever Assembly
6. Headset (Upper/Lower)
7. Front Fairing w/Headlamp Cover
8. Front Fairing Cover
9. Front Wheel Complete
10. Front Fork
11. Front Seat Fairing
12. On/Off Switch
13. Charger Port
14. Battery (2-12V/7Ah) w/30 Amp Fuse
15. Seat w/Storage Compartment
16. Control Module
17. Base Fairing
18. Kickstand
19. Motor (24V 250W)
20. Rear Wheel Complete (See page 9 for hardware sequence)
21. Chain
22. Chain Guard
23. Chain Tensioner
24. Rear Seat Fairing w/Name Plate
25. Rear Fairing w/Trim (Right/Left)

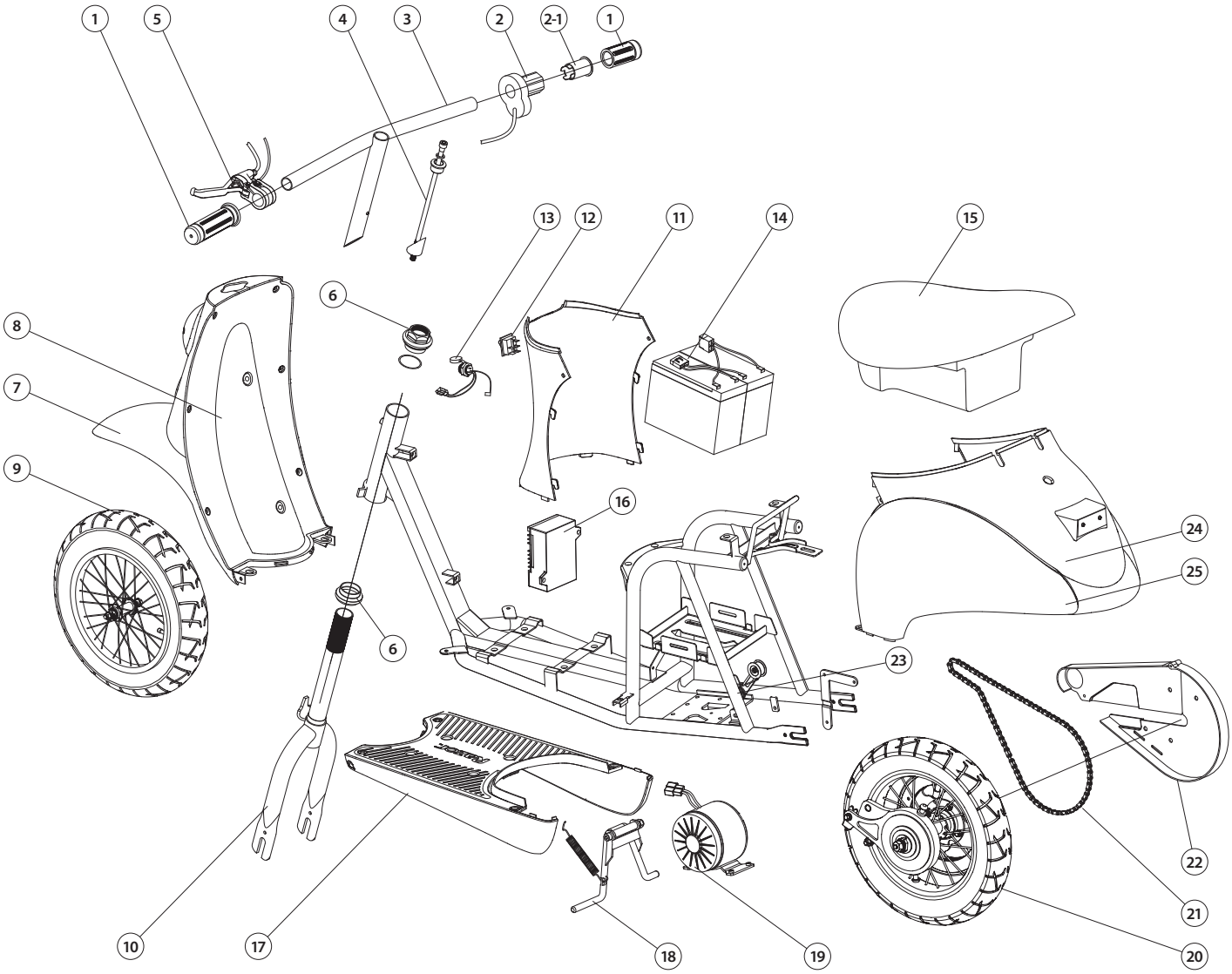

Need Help? Visit our website for replacement parts, product support, a list of authorized service centers in the US and customer service contact information at **www.razor.com**. Please have the product I.D. code (located on the white label of your product) available for better assistance. Additional Customer Service contact information is listed at the back of this manual.

NOTICE: INSURANCE
YOUR INSURANCE POLICIES MAY NOT PROVIDE COVERAGE FOR ACCIDENTS INVOLVING THE USE OF THIS SCOOTER/ELECTRIC RIDE-ON PRODUCT. TO DETERMINE IF COVERAGE IS PROVIDED, YOU SHOULD CONTACT YOUR INSURANCE COMPANY OR AGENT.

FCC COMPLIANCE

This device complies with Part 15 of the FCC Rules. Operation is subject to the following two conditions: (1) This device may not cause harmful interference, and (2) this device must accept any interference received, including interference that may cause undesired operation.

Note: This equipment has been tested and found to comply with the limits for a Class B digital device, pursuant to part 15 of the FCC Rules. These limits are designed to provide reasonable protection against harmful interference in a residential installation. This equipment generates, uses and can radiate radio frequency energy and, if not installed and used in accordance with the instructions, may cause harmful interference to radio communications. However, there is no guarantee that interference will not occur in a particular installation. If this equipment does cause harmful interference to radio or television reception, which can be determined by turning the equipment off and on, the user is encouraged to try to correct the interference by one or more of the following measures:

- Reorient or relocate the receiving antenna.

- Increase the separation between the equipment and receiver.

- Connect the equipment into an outlet on a circuit different from that to which the receiver is connected.

- Consult the dealer or an experienced radio/TV technician for help.

⚠ **WARNING:** Changes or modifications to this product not expressly approved by Razor USA, could void the user's authority to operate the equipment.

WARRANTY

Razor Limited Warranty

The manufacturer warranties this product to be free of manufacturing defects for a period of 90 days from date of purchase. This Limited Warranty does not cover normal wear and tear, tire, tube or cables, or any damage, failure or loss caused by improper assembly, maintenance, storage or use of the Razor Pocket Mod.

This Limited Warranty will be void if the product is ever:
- used in a manner other than for recreation or transportation;
- modified in any way;
- rented.

The manufacturer is not liable for incidental or consequential loss or damage due directly or indirectly to the use of this product.

Razor does not offer an extended warranty. If you have purchased an extended warranty, it must be honored by the store at which it was purchased.

For your records, save your original sales receipt with this manual and write the serial number below.

_____

CUSTOMER SERVICE CONTACT INFORMATION

Need Help? Visit our website for replacement parts, product support, a list of authorized service centers in the US and customer service contact information at **www.razor.com**. Please have the product I.D. code (located on the white label of your product) available for better assistance. Additional Customer Service contact information is listed below:

AMERICAS

Razor USA LLC
P.O. Box 3610
Cerritos, CA 90703
USA

+1 866 467 2967
Monday - Friday
8:00 AM - 5:00 PM Pacific Time
customersupport@razorusa.com

EUROPE, MIDDLE EAST, AFRICA

Razor USA LLC (Europe)
Handelsweg 2
2742 RD Waddinxveen
Netherlands

+44 (0) 120 267 2702
info@razoreu.com

ASIA

Razor USA LLC (Asia)
P.O. Box 3610
Cerritos, CA 90703
USA

+81 50 7579 6622
info@razor-asia.com

UNITED KINGDOM AND IRELAND

Razor USA LLC (UK)
Unit 20
Hartnoll Business Centre
Post Hill, Tiverton
Devon EX16 4NG
UK

+44 (0) 120 267 2702
info@razoreu.com

AUSTRALIA AND NEW ZEALAND

Razor USA LLC
P.O. Box 4280
Auburn South
VIC 3122
Australia

+1 800 954 354 (AU)
+0 800 003 221 (NZ)
info@razoranz.com

IMPORTED IN JAPAN BY B-PLUS ASIA CORP.

Razor USA LLC
THE RIPSTIK COMPANY
Kurokawa 3-1, Asaoku,
Kawasaki, Kanagawa
215-0035 JAPAN

+81 (0) 44 328 9057 Tel
+81 (0) 44 328 9067 Fax
info@razor-asia.com

Printed in China for Razor USA LLC.

Copyright ©2003-2021 Razor USA, LLC. All rights reserved. Razor® and the Razor logo design are among the registered trademarks of Razor USA LLC in the United States and/or select foreign countries. Pocket Mod™ and the Pocket Mod logo design are trademarks of Razor USA LLC.

US_210401